STANDARD FLYING CAM UNITS FOR PIERCE

—MGFV・MEVN—

CAM DIAGRAM P.1177

— Without automatic alignment —

MGFV150 (θ=00-65)

MEVN150 (θ=00-65)

(Economy type)

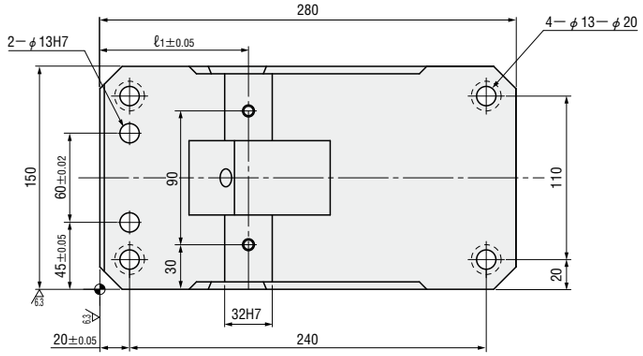

■Rear removal space

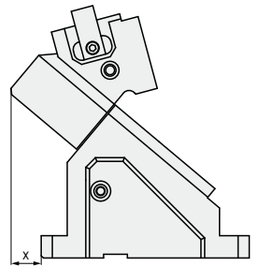

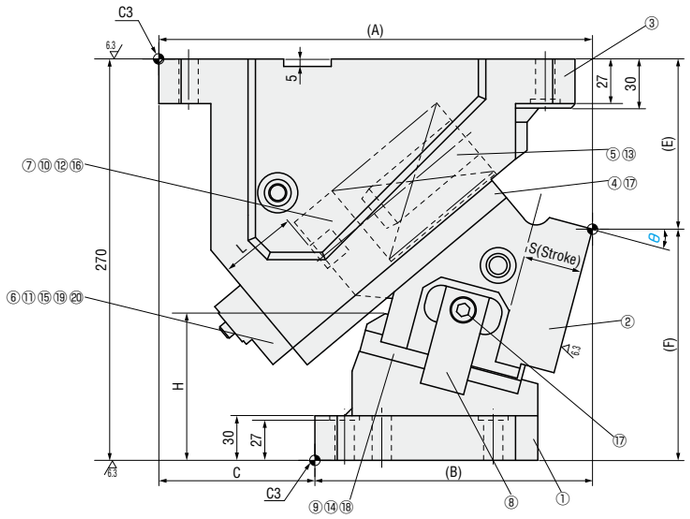

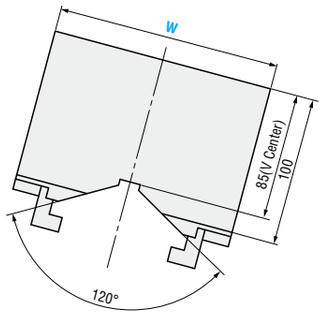

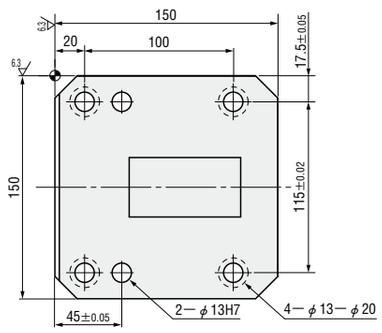

■Components table P.1179

W	θ	A	B	C	E	F	H	L	ℓ1	x
150	00	280	160	120	85	185	94.0	50	100	20
	05	288.26	173.26	115	95.84	174.16				
	10	285.54	180.54	105	102.36	167.64	98.9			41
	15	291.79	186.79		114.47	155.53	98.7			
	20	286.97	196.97	90	122.07	147.93	103.5		135	57
	25	291.02	201.02		135.08	134.92	103.2			
	30	283.92	213.92	70	138.4	131.6	112.8			69
	35	285.66	215.66		151.91	118.09	112.4			
	40	276.20	231.20	45	155.53	114.47	121.9		170	75
	45	275.56	230.56		169.14	100.86	121.4			
	50	263.74	238.74	25	167.65	102.35	137.0			
	55	260.74	235.74		180.94	89.06	137.6			77
	60	246.6	246.6	0	193.92	76.08	138.2			100
	65	241.35	241.35		206.49	63.51	138.6	40		104

Slide Stroke S	Working force KN (tonf)		Spring load N (kgf)			Total weight kg	Catalog No.	W	θ
	Standard working force	Max. working force	Preload	5mm before bottom dead center	Max. load				
32.1	88.3 (9.0)	132.4 (13.5)	636 (64.9)	3991(407.0)	4611 (470.2)	45.4	—Without automatic alignment— MGFV MEVN (Economy type)	150	00
32.3				3999(407.8)		45.9			05
38.9				4102(418.3)		44.4			10
39.7				4110(419.1)		44.9			15
46.1				4182(426.4)		43.2			20
47.8				4198(428.0)		43.7			25
54.3				4245(432.9)		42.2			30
57.4				4261(434.5)		42.7			35
64.3				4301(438.6)		41.0			40
69.6				4325(441.0)		41.4			45
77.8				4357(444.2)		40.5			50
87.2				4380(446.7)		40.9			55
98.5				4412(449.9)		41.5			60
93.2			1431 (145.9)	4444(453.2)		42.2			65

Order

Catalog No.	W	—	θ
MGFV	150	—	25

Days to Ship Quotation

Price Quotation

Alterations

Catalog No.	W	—	θ	—	(N12・N16…etc.)
MGFV	150	—	15	—	N12

Alterations	Code	Spec.
φ12H7 or φ16H7	N12	Change dowel hole diameter φ13H7 ⇨ φ12H7
	N16	Change dowel hole diameter φ13H7 ⇨ φ16H7
	K	Add 2 locating keys (With 2 hexagon socket head cap screws M8×15)
	TK	T-keywaying Add 6 locating keys (With 6 hexagon socket head cap screws M8×15)
Plate Screw Nut Collar	S	With collars, screws and nuts to fix bottom dead center.