PLAIN GUIDE POST SETS
—OIL・OIL-FREE TYPES—

RoHS

Replacement parts P.943

① M FC250
② M S45C
H 55HRC～(Induction hardening)
③ M FC250

MY (Oil type)

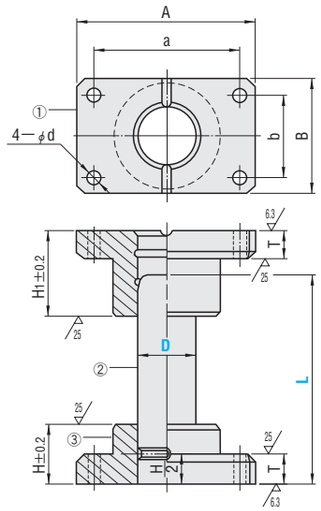

MYP (With dowel hole, oil type)

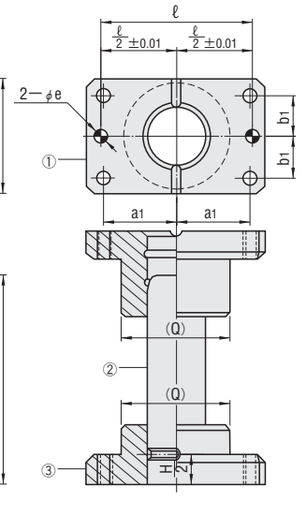

(Q) values are reference only.

① M FC250
Special solid lubricant (embedded)
② M S45C
H 55HRC～(Induction hardening)
③ M FC250

MYZ (Oil-free type)

Replacement parts P.943

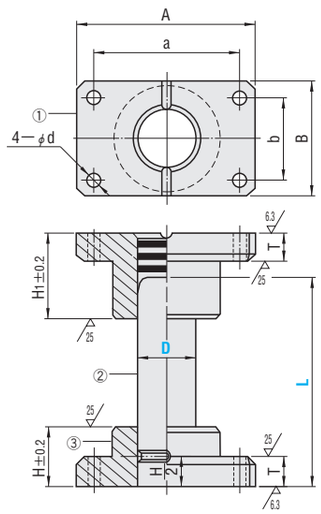

MYZP (With dowel hole, oil-free type)

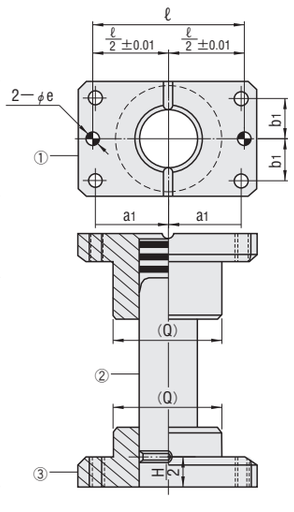

(Q) values are reference only.

Perpendicularity of guide holder bottom and guide post: 0.02mm/100mm or less (Refer to **P.944**.)

D	A	B	a	b	d	H	H1	T	(Q)	ℓ	a1	b1	eH7		④Provided bolt	⑤Provided dowel pins
20	74	44	56	30	6.6	30	40	15	42	56	28	15	6	+0.012 0	CB 6—30	MSTM 6—20
25	84	48	66	30	9	30	45	20	46	66	33	15	8	+0.015 0	CB 8—35	MSTM 8—30
32	100	58	76	36	11	40	50	20	56	76	38	18	8		CB10—40	MSTM 8—30
38	130	75	100	44	11	50	60	25	73	100	50	22	10		CB10—45	MSTM10—40
50	155	90	125	60	14	65	85	25	87	125	62.5	30	10		CB12—50	MSTM10—40
60	190	120	150	80	18	75	100	30	116	150	75	40	13	+0.018 0	CB16—60	MSTM13—50
80	230	150	180	110	22	100	130	35	145	190	90	55	16		CB20—75	MSTM16—60

Catalog No. Type	D	L	Base unit price 1～9 pieces MY	MYP	MYZ	MYZP
MY MYP MYZ MYZP	20	80 90 100 110 120				
		130 140 150 160				
	25	80 90 100 110 120				
		130 140 150 160 170 180 200				
	32	90 100 110 120 130 140				
		150 160 170 180 200 220 250				
	38	110 120 130 140 150 160 170 180	Quotation			
		200 220 250 280 300				
	50	160 170 180 200 220 250				
		280 300 350				
	60	180 200 220 250 280 300				
		350 400				
	80	250 280 300 350				
		400 450				

In accordance with safety standards for the transport of heavy items, φ80 posts include M12 tap holes, and can be hoisted up for transport by means of lifting eye bolts.

Order Catalog No. — L
MYZP 50 — 250

Price Quotation

Days to Ship Quotation

Alterations Catalog No. — L(LC) — (M・B・H・N・C, etc.)
MYZP 50 — LC240 — B—H
Quotation

Alteration	Code	Spec.	D	1Code
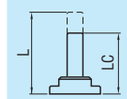	LC	Post length change 1mm increments LCmin.≦LC＜Lmax. **Details of alteration** P.944	20・25・32 38・50 60・80	Quotation
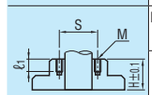	Bushing W	Machining for mounting of a stroke end block Tap holes are machined for attaching a stroke end block. ⊗ Cannot be used for D20. **Details of alteration** P.944	25・32 38・50 60・80	
	Holder M		25～80	
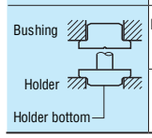	Bushing B	Machining of flange for reversed bushing and/or holder orientation Use of the reversed bushing and/or holder allows the die height to be reduced. Alterations B and H can be combined at the same time. The post length is measured from the holder bottom. **Details of alteration** P.944	20・25・32 38・50 60・80	
	Holder H			

Alteration	Code	Spec.	D	1Code
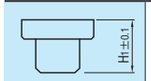	BKC	Bushing H1 dimension tolerance change H1±0.2 ⇨ ±0.1 ⊗ Cannot be used for D20.	25・32 38・50 60・80	
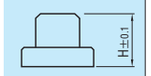	HKC	Holder H dimension tolerance change H±0.2 ⇨ ±0.1 ⊗ Cannot be used for D20.	25・32 38・50 60・80	
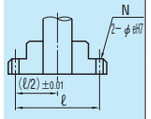	N	Addition of locating dowel holes 2 locating dowel holes are machined on the holder. Can be used for MY・MYZ. Dowel pins are not provided. (D / ℓ / e: 20 / 56 / 6; 25 / 66 / 8; 32 / 76 / 8; 38 / 100 / 10; 50 / 125 / 10; 60 / 150 / 13; 80 / 190 / 16)	20・25・32 38・50 60・80	Quotation
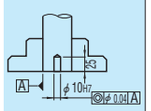	C	Addition of locating dowel hole (1 hole at center) Locating dowel hole is machined at center of post. Dowel pin is not provided.	20・25・32 38・50 60・80	

HOLDER GUIDE POST SETS